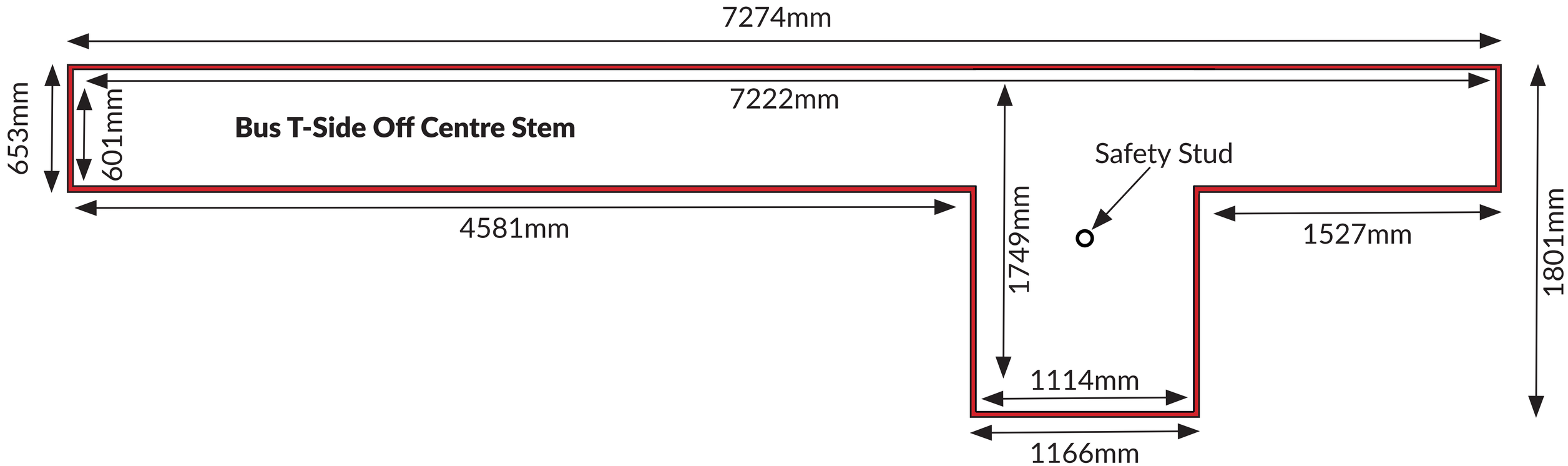
7274mm
7222mm
653mm
601mm
Bus T-Side Off Centre Stem
Safety Stud
4581mm
1749mm
1527mm
1801mm
1114mm
1166mm